Electrolux PROFESSIONAL

Modular Cooking Range Line 700XP Gas Tilting Bratt Pan 60lt with Duomat bottom

ITEM #

MODEL #

NAME #

SIS #

AIA #

371181 (E7BRGHDNF0) 60-lt gas tilting Braising Pan with duomat cooking surface

Short Form Specification

Item No.

Suitable for natural gas or LPG. Burners in AISI 441 with optimized combustion, flame failure device, piezo ignition and electronic flame control. Duomat cooking surface for roasting, browning, stewing, preparation of sauces, sautéing, boiling and braising. Can be installed on cantilever systems. Installation on wheels is not available. Mechanism to manually tilt the pan. Double-skinned lid in stainless steel. Cooking temperature can be set through thermostat. Exterior panels in stainless steel with Scotch Brite finish. Height adjustable feet in stainless steel. Right-angled side edges to allow flush-fitting junction between units.

APPROVAL:

Main Features

- Actual cooking temperature setting through adjustable thermostat.
- Working temperature can be set from 90 °C to 290 °C.
- Manual tilting mechanism to facilitate pan emptying.
- Smooth large surfaces, easy access for cleaning.
- Unit to have stainless steel feet with height adjustment up to 50 mm.

Construction

- Cooking surface with Duomat bottom: a 10 mm-thick alloy obtained from the combination of 2 different stainless steels for better thermal stability and corrosion resistance.
- Lid in stainless steel.
- All pan internal surfaces round and polished for better hygiene.
- All exterior panels in Stainless Steel with Scotch Brite finishing.
- One piece pressed 1.5 mm work top in Stainless steel.
- Model has right-angled side edges to allow flush fitting joints between units, eliminating gaps and possible dirt traps.
- IPx4 water protection.
- Burners in AISI 441 against corrosion and thanks to a high strenght yield, are resistant to high temperature.
- Usable capacity of the well 50 liters.

Sustainability

- Heat-insulated: limited heat radiation and low energy consumption.

Optional Accessories

• Draught diverter, 150 mm diameter	PNC 206132	❑
• Matching ring for flue condenser, 150 mm diameter	PNC 206133	❑
• Flanged feet kit	PNC 206136	❑
• Frontal kicking strip for concrete installation, 800mm	PNC 206148	❑
• Frontal kicking strip for concrete installation, 1000mm	PNC 206150	❑
• Frontal kicking strip for concrete installation, 1200mm	PNC 206151	❑
• Frontal kicking strip for concrete installation, 1600mm	PNC 206152	❑
• Frontal kicking strip, 800mm (not for refr-freezer base)	PNC 206176	❑
• Frontal kicking strip, 1000mm (not for refr-freezer base)	PNC 206177	❑
• Frontal kicking strip, 1200mm (not for refr-freezer base)	PNC 206178	❑
• Frontal kicking strip, 1600mm (not for refr-freezer base)	PNC 206179	❑
• Kit 4 feet for concrete installation (not for 900 line free standing grill)	PNC 206210	❑
• Pair of side kicking strips	PNC 206249	❑
• Pair of side kicking strips for concrete installation	PNC 206265	❑
• Chimney upstand, 1000mm	PNC 206305	❑
• Rear paneling - 800mm (700/900)	PNC 206374	❑
• Rear paneling - 1000mm (700/900)	PNC 206375	❑
• Rear paneling - 1200mm (700/900)	PNC 206376	❑
• Chimney grid net, 590mm (700XP/900)	PNC 206403	❑
• Kit G.25.3 (NI) gas nozzles for 700 and 900 braising pans	PNC 206464	❑
• Trolley with lifting & removable tank	PNC 922403	❑
• Pressure regulator for gas units	PNC 927225	❑

Recommended Detergents

• C41 HI-TEMP RAPID DEGREASER. Suitable for cleaning plates and grills with high temperature surfaces (max 175°C). Pack of 6 1l bottles (includes 1 spray bottle code 0S2331)	PNC 0S2292	❑

The company reserves the right to make modifications to the products without prior notice. All information correct at time of printing.

2024.10.08

Modular Cooking Range Line 700XP Gas Tilting Bratt Pan 60lt with Duomat bottom

Front

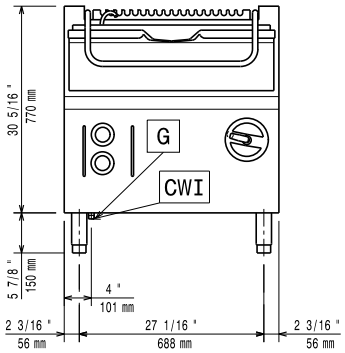

Side

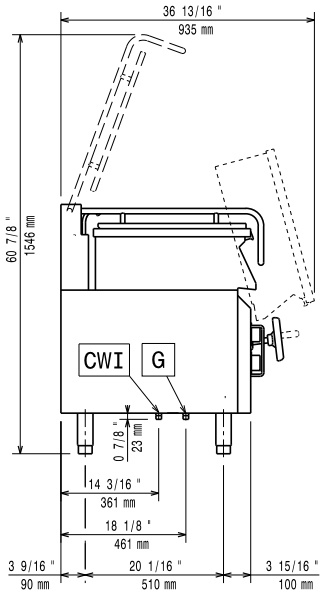

CWI1 = Cold Water inlet 1 (cleaning)
G = Gas connection

Top

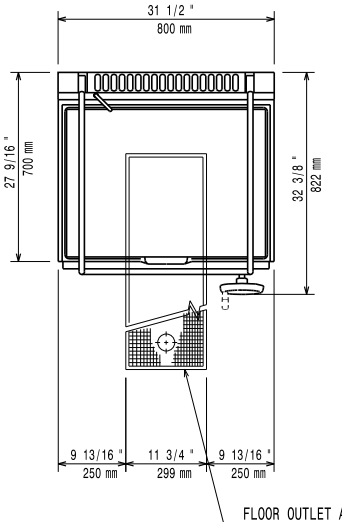

Electric

Predisposed for:

Gas

Gas Power:	16 kW
Standard gas delivery:	Natural Gas G20 (20mbar)
Gas Type Option:	LPG
Gas Inlet:	1/2"

Key Information:

Cooking Surface Depth:	410 mm
Cooking Surface Width:	680 mm
Cooking Surface Thickness:	10 mm
Cooking Well Height:	200 mm
Well Capacity, Max:	60 lt
Working Temperature MIN:	90 °C
Working Temperature MAX:	290 °C
External dimensions, Width:	800 mm
External dimensions, Depth:	730 mm
External dimensions, Height:	850 mm
Net weight:	105 kg
Shipping weight:	122 kg
Shipping height:	1080 mm
Shipping width:	820 mm
Shipping depth:	860 mm
Shipping volume:	0.76 m³

No clearance needed on rear sides of unit if wall is of non combustible type. If wall is combustible, minimum 50 mm wall clearance should be maintained.

Certification group:	N7BRG

The company reserves the right to make modifications to the products without prior notice. All information correct at time of printing.